深圳科盈电子有限公司
QUAWIN ELECTRONICS CO., LTD

# interchangeable plug Adapter EU/US/UK/AU/CN standard 15V 3a power supply

## Quick Detail:

Brand Name:QUAWIN/OEM
Model Number:QW150-030-AI
Use:Wall-mounted Adapter,Interchangeable plugs,Desktop Power Supplies,Type C charger, Quick Charger,Car Charger and Wireless Charger.
Type:Electric
Place of Origin:Guangdong China (Mainland)
Certificate:CE GS UL CB FCC SAA RCM PSE KC CCC Approvals
AC Plug:EU/US/UK/AU/CN standard
Color:Black/White
Input voltage:90-264VAC 47/63Hz
Output voltage:15V
Output current:3A
Output power:45W
Ripple & noise:150mV
Output Regulation:±5%
Energy Efficiency:LEVEL VI
Safeties Standard:60950/ 60335/ 61558/ 60065
Output connector:1.2m/1.5m/1.8m Wire
Operating Temperature:0℃ ~ +55℃
Storage Temperature:-20℃~+80%℃
Dimension :97.1 * 45.1 * 32mm
Humidity:5~95%RH(non-condensing)
Primary to Secondary:50MΩ Min
Ripple and Noise:100mVp-p Max

## Packaging & Delivery :

inner package: Industrial Packing Carton Size: 47*36.5*19 cm 50 pcs Per Carton
(Customized Packing To Be Acceptable)
Delivery Detail:sample within 5 work days,7~25 days for bulk order

## Safety protections:

- Over Voltage protection
- Short Circuit protection
- Input protection
- Compliance with ROHS requirements

ADD:6/F,Bldg.16,Wangtang Industrial Zone,XinWei Village,Xili Town of Nanshan District,Shenzhen
WEB：www.quawin.com
TEL:86-755-86277191/86277197
FAX:86-755-86277151

# 深圳科盈电子有限公司
# QUAWIN ELECTRONICS CO., LTD

| Typical model | Output Voltage | Output Current | Ripple & noise | Efficiency |
|---|---|---|---|---|
| QW050-050-AI | 5V | 5000mA | 50mV | VI |
| QW090-050-AI | 9V | 5000mA | 90mV | |
| QW120-030-AI | 12V | 3000mA | 120mV | |
| QW120-040-AI | 12V | 4000mA | 120mV | |
| QW150-030-AI | 15V | 3000mA | 150mV | |
| QW240-015-AI | 24V | 1500mA | 240mV | |
| QW240-020-AI | 24V | 2000mA | 240mV | |



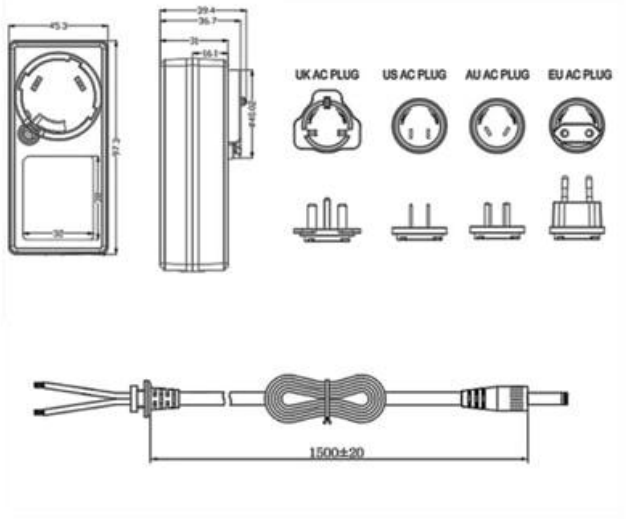


ADD:6/F,Bldg.16,Wangtang Industrial Zone,XinWei Village,Xili Town of Nanshan District,Shenzhen
WEB：www.quawin.com
TEL:86-755-86277191/86277197
FAX:86-755-86277151

# 深圳科盈电子有限公司
# QUAWIN ELECTRONICS CO.. LTD



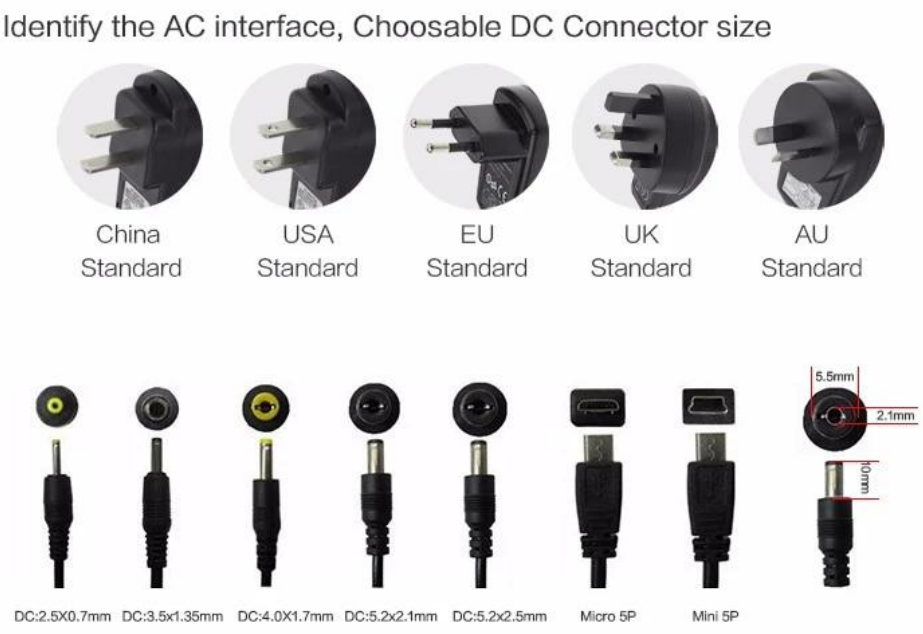


ADD:6/F,Bldg.16,Wangtang Industrial Zone,XinWei Village,Xili Town of Nanshan District,Shenzhen
WEB：www.quawin.com
TEL:86-755-86277191/86277197
FAX:86-755-86277151

# 深圳科盈电子有限公司
# QUAWIN ELECTRONICS CO., LTD

Universal DC OD5.5mm standard interface

5.5mm DC interface | 2.1mm Inner size | 150cm Line length



Efficient Anti – Interference Magnetic ring

Effectively reduce the EMI electromagnetic interference, to ensure stable current output



## OUR COMPANY




Front desk



Exhibition



Sales Department



Production operation



Workshop



Production equipment



Warehouse



SMT



Aging room

ADD:6/F,Bldg.16,Wangtang Industrial Zone,XinWei Village,Xili Town of Nanshan District,Shenzhen
WEB：www.quawin.com
TEL:86-755-86277191/86277197
FAX:86-755-86277151

# 深圳科盈电子有限公司
# QUAWIN ELECTRONICS CO., LTD

## OUR CERTIFICATE



























ADD:6/F,Bldg.16,Wangtang Industrial Zone,XinWei Village,Xili Town of Nanshan District,Shenzhen
WEB：www.quawin.com
TEL:86-755-86277191/86277197
FAX:86-755-86277151